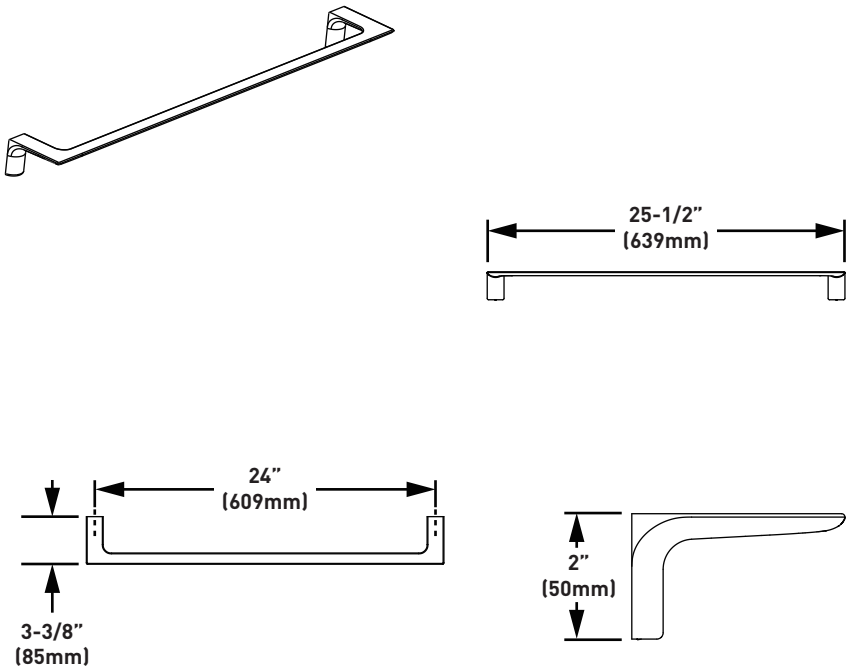
Diletta™ Technical Specification

24" Towel Bar YB9524

Stock Numbers:

- **YB9524CH - 24“ Towel Bar**
  Chrome Finish
- **YB9524BL - 24“ Towel Bar**
  Matte Black Finish
- **YB9524BZG - 24“ Towel Bar**
  Bronzed Gold Finish

Dimensions:



Materials:

Zinc alloy posts, S.S 201 tube

Installation Instructions:

Please refer to product instructions for installation steps.

Cleaning Instructions:

To preserve the fine finish of this product, clean only with a soft damp cloth.
Use a dry cloth to wipe down the product and remove any excess moisture.
Do not use commercial or abrasive cleaners.

MOEN®

25300 AL MOEN DRIVE • NORTH OLMSTED, OH 44070
CORPORATE HEADQUARTERS: (800) 321-8809 • FAX: (800) 848-6636
INTERNATIONAL: (440) 962-2000 • FAX: (440) 962-2726
CUSTOMER SERVICE (USA): 800-882-0116 • FAX: (888) 379-2720
WWW.MOEN.COM
©2025 Moen Incorporated. Moen is a registered trademark and Diletta is a trademark of Moen Incorporated. All rights reserved.

IN-21/2025 SPEC2504 300000693707
Replaced IN-